8.5.9 Lesson Date: _____

Examples of Functions from Geometry

Student Objectives

- I can write rules to express functions related to geometry.
- I know how to calculate volume and what it means.

Notes:

- ***Volume*** *is the space that a* 3*-dimensional figure can occupy.*
- ***The volume*** *of a glass is the amount of liquid it can hold.*
- $V = Bh$ *(units cubed),* $B =$ *the area of the base (units squared)*
- *Formulas are a special form of functions.*

Classwork

1. Dartboards typically have an outer ring of numbers that represent the number of points a player can score for getting a dart in that section. A simplified dartboard is shown below. The center of the circle is point A. Calculate the area of the outer ring. Write an exact answer that uses π (<u>do not</u> approximate your answer by using 3.14 for π).

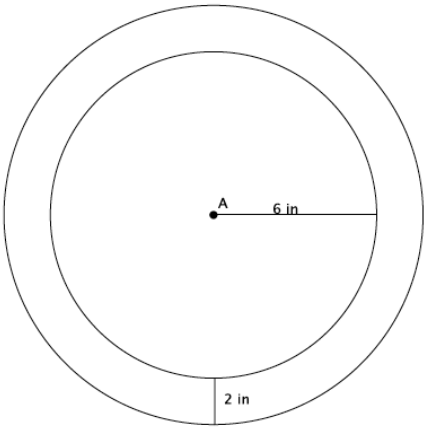

2. The volume of the prism shown below is 61.6 in^3. What is the height of the prism?

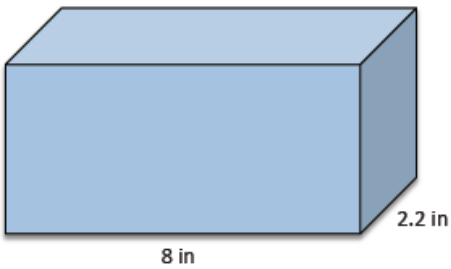

3. Find the value of the ratio that compares the volume of the larger prism to the smaller prism.

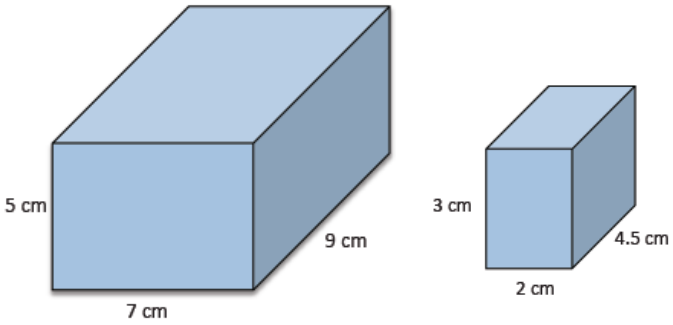

As you complete Exercises 4–6, record the information in the table below.

	Area of base (B)	Height (h)	Volume
Exercise 4			
Exercise 5			
Exercise 6			

4. Use the figure below to answer parts (a)–(c).

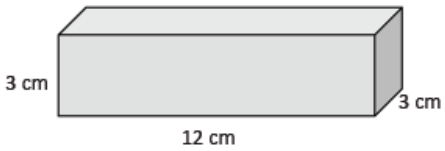

a. What is the area of the base?

b. What is the height of the figure?

c. What is the volume of the figure?

5. Use the figure to the right to answer parts (a)–(c).

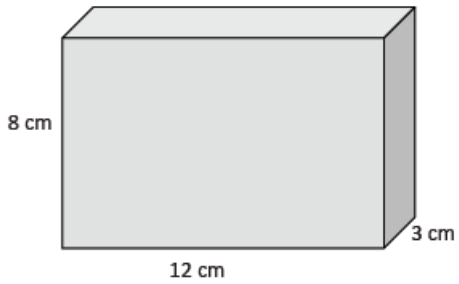

a. What is the area of the base?

b. What is the height of the figure?

c. What is the volume of the figure?

6. Use the figure to the right to answer parts (a)–(c).

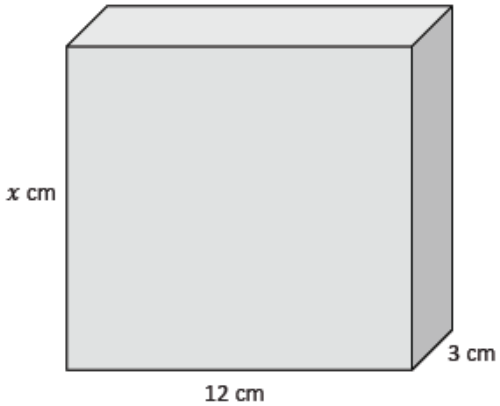

a. What is the area of the base?

b. What is the height of the figure?

c. Write and describe a function that will allow you to determine the volume of any rectangular prism that has a base area of $36\ \text{cm}^2$.

Lesson Summary

Rules can be written to describe functions by observing patterns and then generalizing those patterns using symbolic notation.

Advanced Math 7 Period _____ Name: _____

8.5.9 Homework Set Date: _____

Homework Homework Homework Homework Homework

1. Calculate the area of the 3-inch white border of the square figure below.

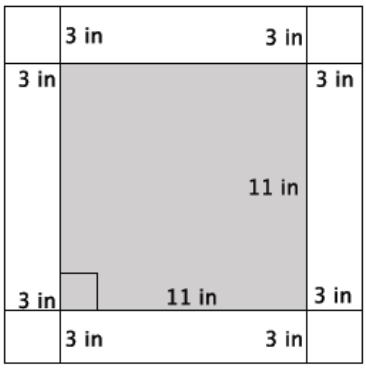

2. The solid shown was filled with water and then poured into the standard rectangular prism as shown. The height that the volume reaches is 14.2 in. What is the volume of the solid?

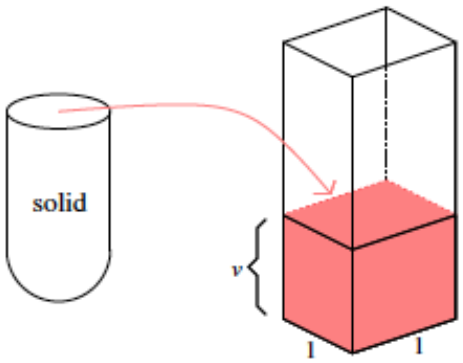

3. Determine the volume of the rectangular prism shown below.

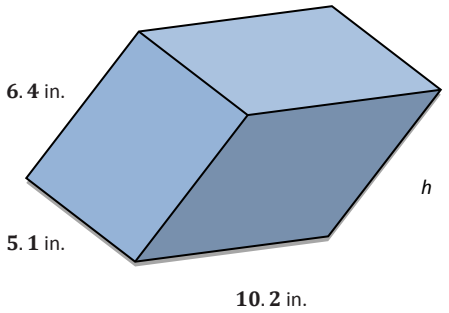

4. The volume of the prism shown below is $972\ cm^3$. What is its length?
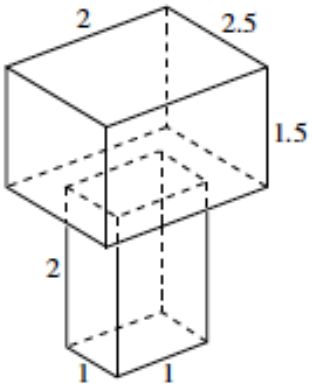
5. Determine the volume of the 3-dimensional figure below. Explain how you got your answer.